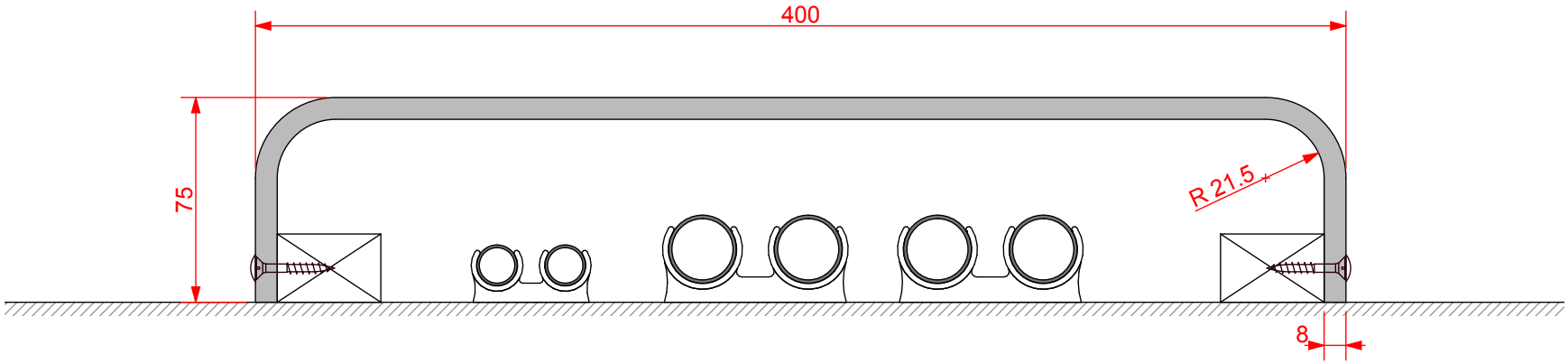

Encasement Ltd
Peartree Business Centre
Enterprise Way, Bretton, Peterborough
Cambridgeshire PE3 8YQ
t: +44 (0)1733 266 889
f: +44 (0)1733 268 999
w: www.encasement.co.uk

standard specification detail:

type:
pre-formed plywood boiler pipe work casing

ref: Boiler pipe work casing

thickness: 8mm

length:495, 2500 or 3000mm

finish: white melamine

joint detail: N/A

accessories: screws & white caps

detail:
Boiler Pipe Work Casing 75/400/75mm

date:	drawn by:
JAN 2013	AW
scale: 1:2.5	paper size: A4

drawing no:
Boiler Pipework Casing 75_400_75.DWG

COPYRIGHT ENCASEMENT LTD